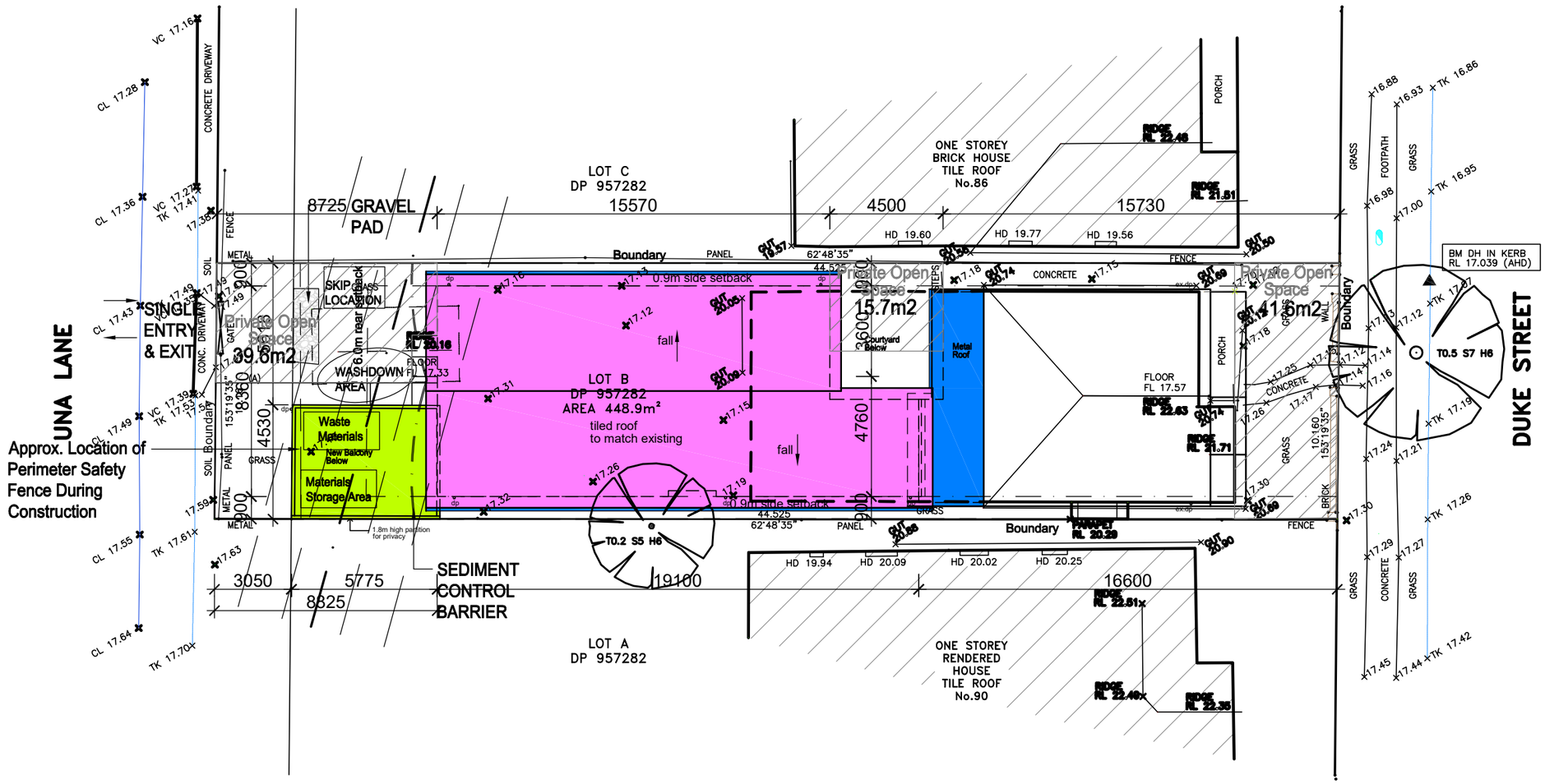

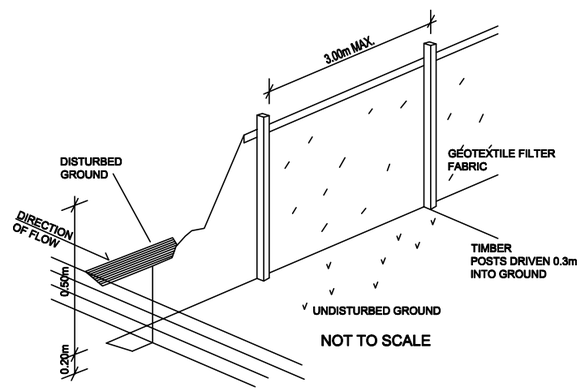

SEDIMENTATION CONTROL NOTES

1. ALL EROSION AND SEDIMENTATION CONTROL MEASURES, INCLUDING REVEGETATION AND STORAGE OF SOIL AND TOPSOIL, SHALL BE IMPLEMENTED TO THE STANDARDS OF THE SOIL CONSERVATION OF NSW.
2. ALL DRAINAGE WORKS SHALL BE CONSTRUCTED AROUND ALL INLET PITS, CONSISTING OF 300mm WIDE X 300mm DEEP TRENCH.
3. ALL SEDIMENT BASINS AND TRAPS SHALL BE CLEANED WHEN THE STRUCTURES ARE A MAXIMUM OF 60% FULL OF SOIL MATERIALS, INCLUDING THE MAINTAINENCE PERIOD.
4. ALL DISTURBDE AREAS SHALL BE REVEGETATED AS SOON AS THE RELEVANT WORKS ARE COMPLETED.
5. SOIL AND TOPSOIL STOCKPILES SHALL BE LOCATED AWAY FROM THE DRAINAGE LINES AND AREA WHERE WATER MAY CONCENTRATE.
6. FILTER SHALL BE CONSTRUCTED BY STETCHING A FILTER FABRIC (PROPEX OR APPROVED EQUIVALENT) BETWEEN POST AT 3.0M CENTRES. FABRIC SHALL BE BURIED 150mm ALONG ITS LOWER EDGE.

AMENDMENTS		DATE	BY
A	Development Application.	28.4.22	G.T.

(NOTES)
All work to be carried out in accordance with BCA, council requirements & relevant Australian standards & codes.
Do not scale off the drawings unless otherwise stated and use figured dimensions in preference.
All dimensions are to be checked and verified by the CONTRACTOR on the site before the commencment of any work, all dimensions and levels are subject to final survey and set-out. Discrepancies to be reported to designer prior to commencement. No responsibility will be accepted by this firm for any variations in design, builder's method of construction or materials used, deviationfrom specification without permission or accepted work practices resulting in interior construction.

COPYRIGHT CLAUSE
This drawing and design is the property of GARY TEH ARCHITECTS and should not be reproduced either in part or whole without the written consent of this firm. The information shown on it is regarded as confidential and must not be disclosed to any third party. This drawing must be returned upon request.

Erosion & Sediment Control Plan

DEVELOPMENT APPLICATION

Designed By: G. Teh
Drawn : G. Teh
Date : 3 February 2022
Scale : 1:200 @ A3

Proposed Alteration and Addition to an Existing Dwelling
FOR Yiwen SUN

At: 88 Duke Street Campsie 2194
Lot : B, DP : 957282
City of Canterbury Bankstown Council

Job No.	Dwg	Issue
2211	DA 004	A

Gary Teh Architects Pty Ltd
8/77 Old Castle Hill Road
Castle Hill NSW 2154 M 0402 963 373
NSW Registered Architect No.7818